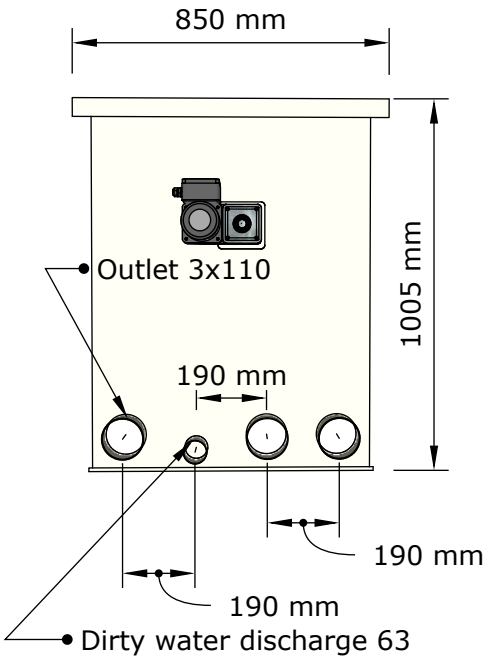

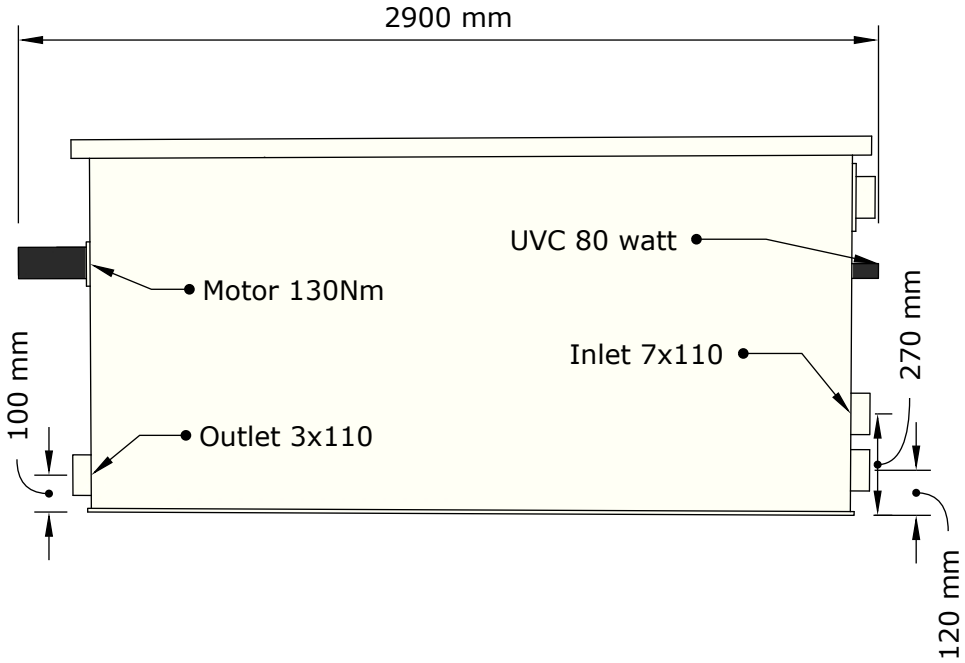

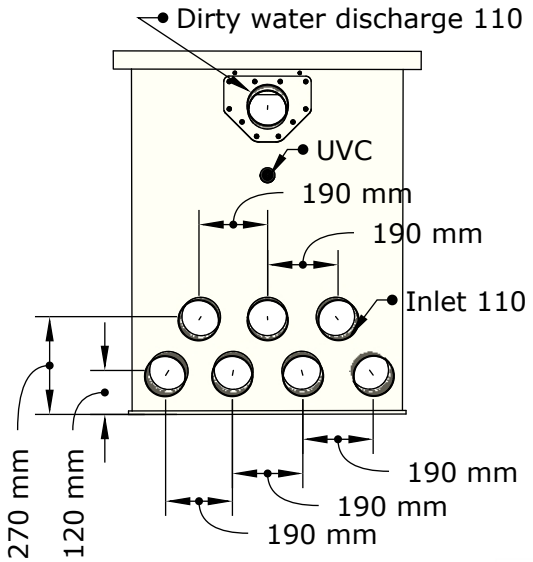

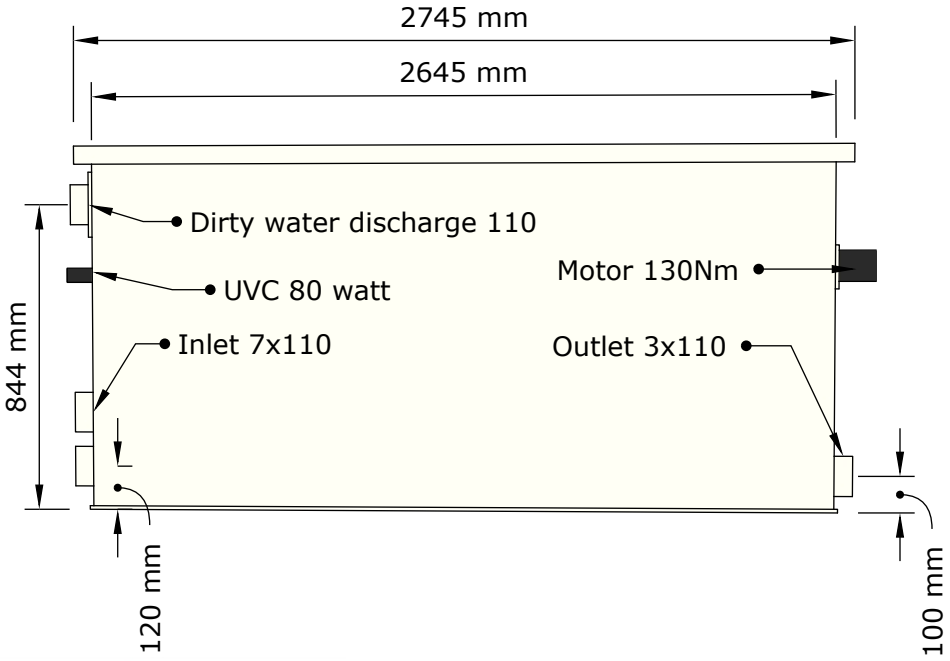

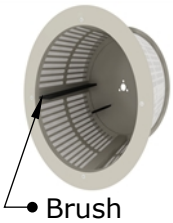

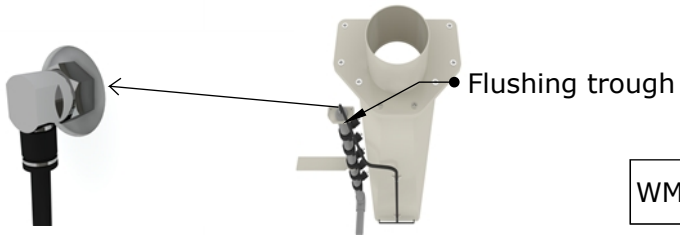

FILTREAU™
EXCELLENT

WMC34ILG	COMBI DRUM 80/100 XXL